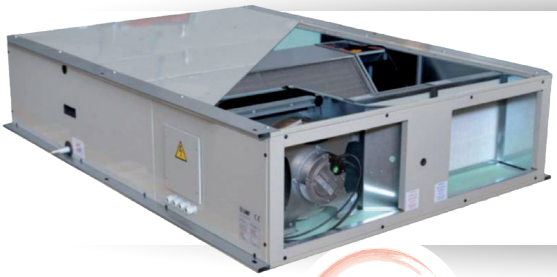

REC PRO 90

High efficiency heat recovery units

Non residential applications

EFFICIENCY 90%

Comply with ErP Directive 125/2009/CE and EU Regulation 1253/2014.
Classification: Non Residential Ventilation Unit (NRVU).
Bidirectional Ventilation Unit (BVU).

- **7 sizes**
- Airflow from **450 to max 5.500 m³/h**
- Vertical and Horizontal models
- Motor EC

DESCRIPTION

The heat recovery units of the **REC PRO 90** series are designed to match the need to equip the buildings with ventilation systems which can combine low energy consumption, high aeraulic performance and high indoor air quality.
In accordance with the new EU 1253/2014 norm, they are equipped with a high efficiency counter-flow plate heat recovery unit (in dry conditions, superior to the minimum efficiency prescribed by the law of 67%), with filters with extremely low pressure drops (F7 on fresh air and M5 on room air exhaust, efficiency calculated according to EN 779:2012) and with backward-curved blades fans, directly coupled with EC motors, guaranteeing power absorptions well below the limits indicated by the norm.

They can easily be integrated with conventional heating and air-conditioning systems and their construction is optimized for a ducted installation in false ceilings and for an all-seasons operation.

The series is available in both vertical and horizontal configuration and in 6 sizes with performances ranking from 450 to max 5.500 m³/h

CONSTRUCTION

- Casing with double skin panels in galvanized metal sheet, 42mm thick.
- External panels in prepainted galvanized steel RAL 9002.
- Internally insulated with thermo-acoustic fire-proof rockwool insulation.
- Extremely high efficiency heat recovery unit (>90%) in counter-flow aluminium plates.
- Integrated by-pass system with actuator, for free-cooling operations.
- M5 efficiency class filters on exhaust and F7 on intake, efficiency calculated according to EN 779:2012.
- Backward curved blades directly coupled with EC motors.
- Integrated control board with electronic control of all the functions : ventilation and temperature control, monitoring of the status of the filters, week programming, defrost management and anti-freeze device, fire alarm and Modbus interface.

UPON REQUEST

The units can be configured with the following function components, supplied assembled and wired on board, to be requested in phase of order:

- **PSTD** - Filters differential pressure switch.
- **DPS** - Differential pressure sensor.
- **AQS** - Ductable CO_2 probe.

ELECTRONIC CONTROL

The control is already mounted and wired to the unit, complete with electronic controller, remote user interface with built-in temperature sensor, 4 NTC sensors and protection fuses.

Functions:
- Manual or automatic fan speed control
- Heating/cooling 3-point valves control (or on/off electric heater)
- Free-cooling management
- Water coil antifreeze management
- Recovery defrost management
- Humidifi er and water cooler management
- Alarm management
- Weekly clock setting
- BMS by Modbus - RS485 connection

RANGE

HORIZONTAL VERSIONS

CODE	MODEL
1RC9000	REC PRO 90-450
1RC9001	REC PRO 90-800
1RC9002	REC PRO 90-1250
1RC9003	REC PRO 90-1900
1RC9004	REC PRO 90-2800
1RC9005	REC PRO 90-3800
1RC9016	REC PRO 90-5400

VERTICAL VERSIONS

CODE	MODEL
1RC9006	REC/V PRO 90-450
1RC9007	REC/V PRO 90-800
1RC9008	REC/V PRO 90-1250
1RC9009	REC/V PRO 90-1900
1RC9010	REC/V PRO 90-2800
1RC9011	REC/V PRO 90-3800
1RC9017	REC/V PRO 90-5400

MAICO ITALIA

DIMENSIONS (mm)

Horizontal versions

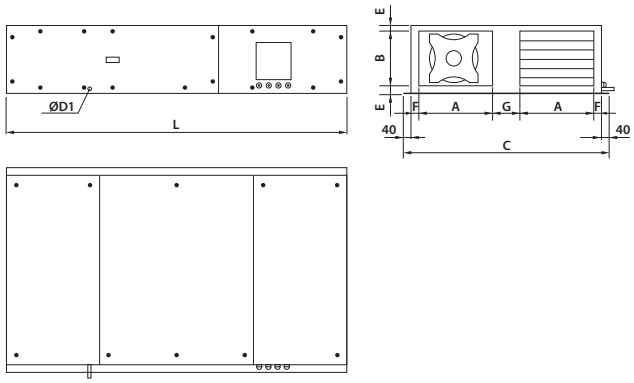

Vertical versions

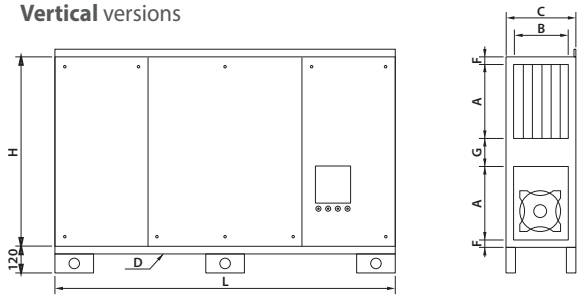

CODE	MODEL	A	B	C	D	E	F	G	L	KG
1RC9000	REC PRO 90-450	230	225	760	½"M	52,5	46	128	1350	86
1RC9001	REC PRO 90-800	300	265	900	½"M	52,5	46	130	1470	106
1RC9002	REC PRO 90-1250	390	350	1110	½"M	52,5	46	158	1850	181
1RC9003	REC PRO 90-1900	600	350	1540	½"M	52,5	46	170	1850	236
1RC9004	REC PRO 90-2800	590	485	1540	½"M	52,5	55	170	2150	297
1RC9005	REC PRO 90-3800	780	485	1920	½"M	52,5	55	170	2150	367
1RC9016	REC PRO 90-5400	800	720	1980	½"M	52,5	40	220	2350	520

CODE	MODEL	A	B	C	D	F	G	H	L	KG
1RC9006	REC/V PRO 90-450	230	225	330	½"M	46	128	680	1350	86
1RC9007	REC/V PRO 90-800	300	265	370	½"M	46	130	820	1470	106
1RC9008	REC/V PRO 90-1250	390	350	445	½"M	46	158	1030	1850	181
1RC9009	REC/V PRO 90-1900	600	350	455	½"M	46	170	1460	1850	236
1RC9010	REC/V PRO 90-2800	590	485	590	½"M	55	170	1460	2150	297
1RC9011	REC/V PRO 90-3800	780	485	590	½"M	55	170	1840	2150	367
1RC9017	REC/V PRO 90-5400	800	720	800	½"M	40	220	1900	2350	520

CONFIGURATIONS

HORIZONTAL EXECUTION - TYPE A ORIENTATION

(1) External air (F7 filter)
(2) Output fan
(3) Input fan
(4) Intake (M5 Filter)

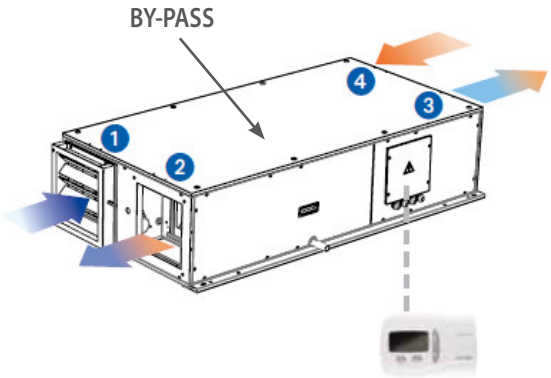

HORIZONTAL EXECUTION - TYPE B ORIENTATION

(1) External air (F7 filter)
(2) Output fan
(3) Input fan
(4) Intake (M5 Filter)

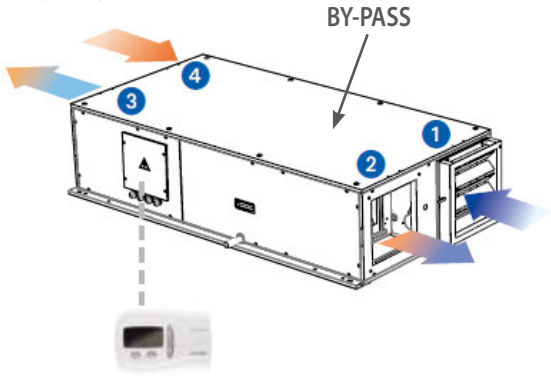

VERTICAL EXECUTION - TYPE C ORIENTATION

(1) External air (F7 filter)
(2) Output fan
(3) Input fan
(4) Intake (M5 Filter)

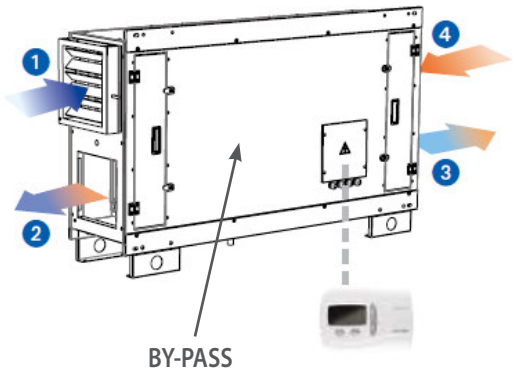

VERTICAL EXECUTION - TYPE D ORIENTATION

(1) External air (F7 filter)
(2) Output fan
(3) Input fan
(4) Intake (M5 Filter)

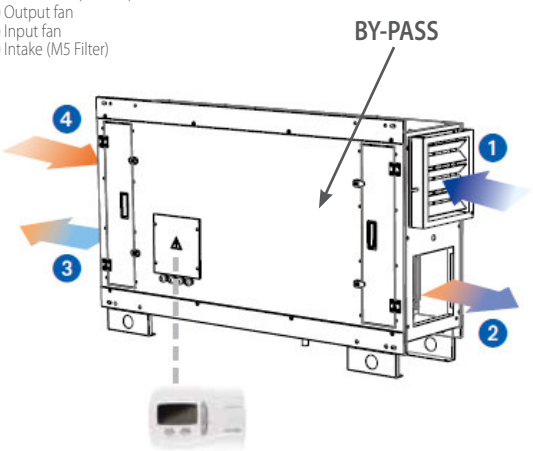

PERFORMANCE

The following curves represent the intake static pressures erogated by the units according to the airflow change (100%, 80%, 60% of the nominal speed) and the working area at the maximum ventilation speed. All performances reported refer to clean filters periodically cleaned.

REC PRO 90 - 450

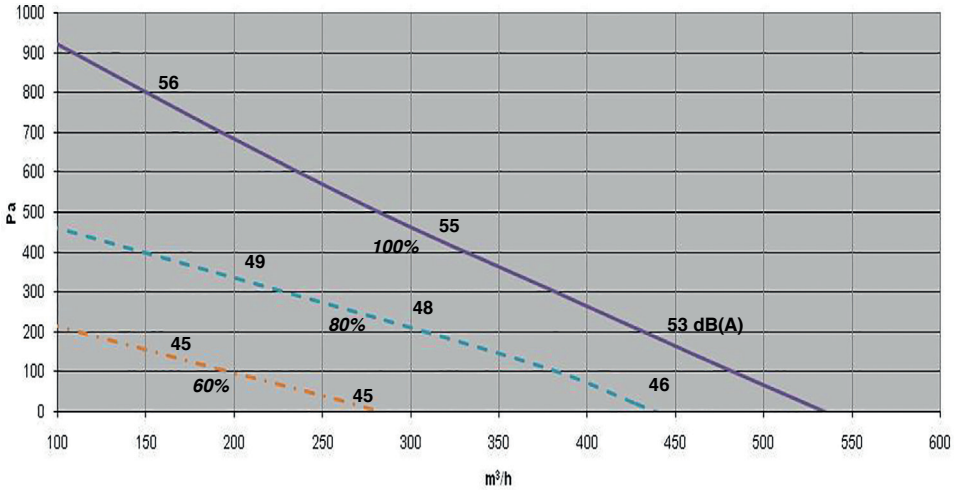

REC PRO 90 - 800

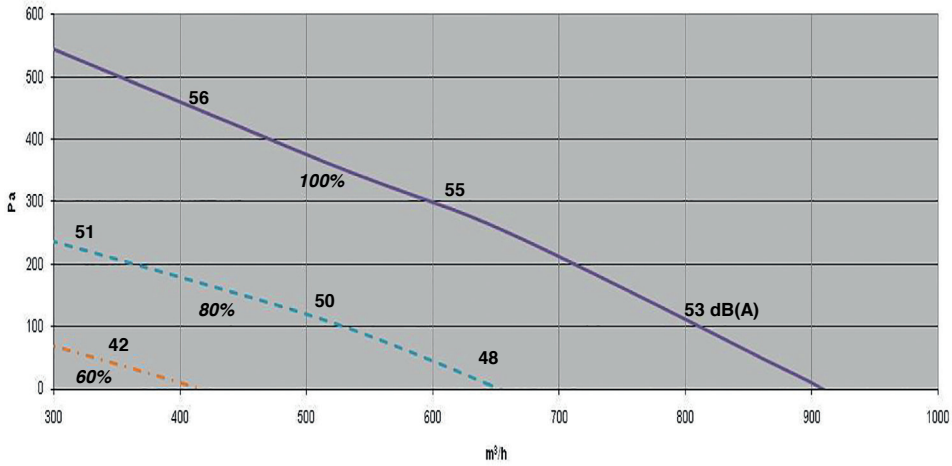

REC PRO 90 - 1250

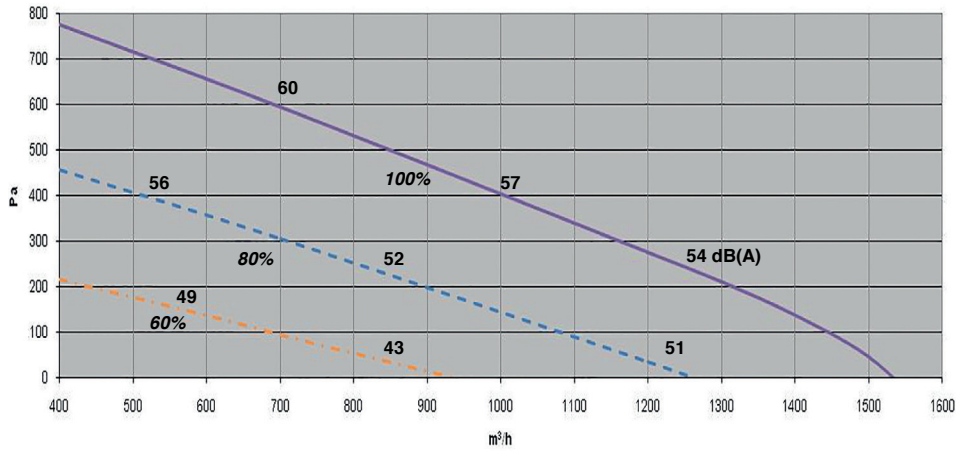

PERFORMANCE

REC PRO 90 - 1900

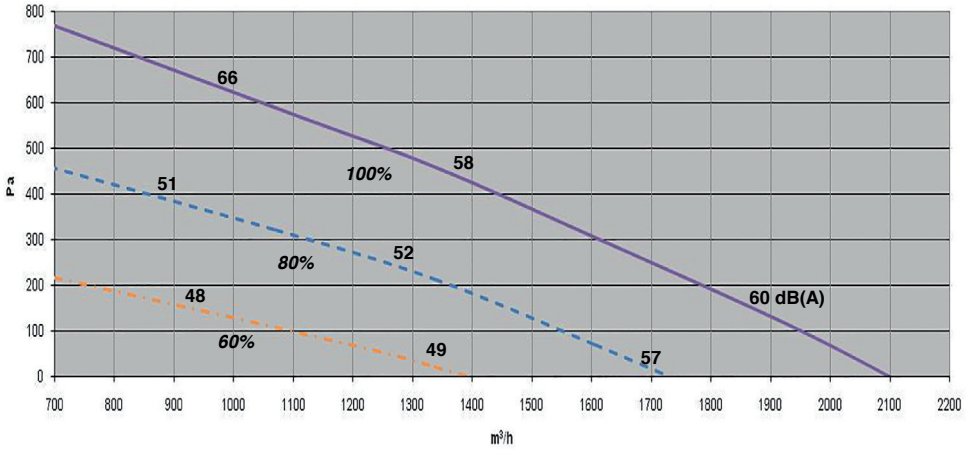

REC PRO 90 - 2800

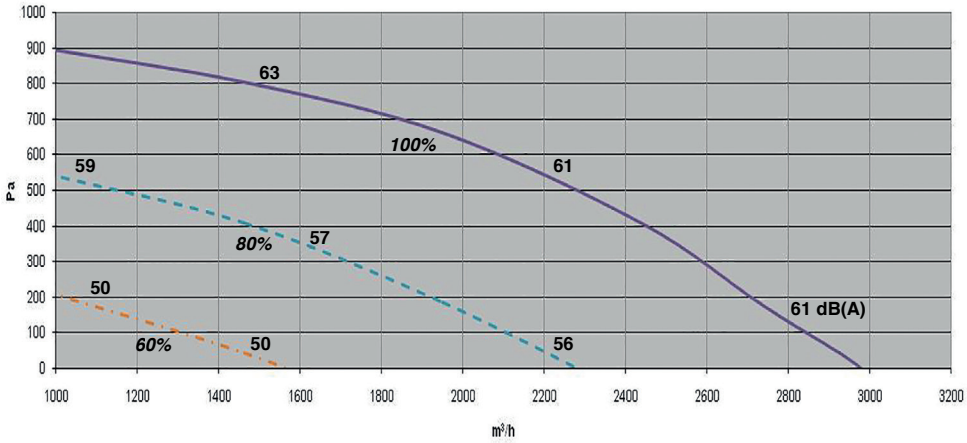

REC PRO 90 - 3800

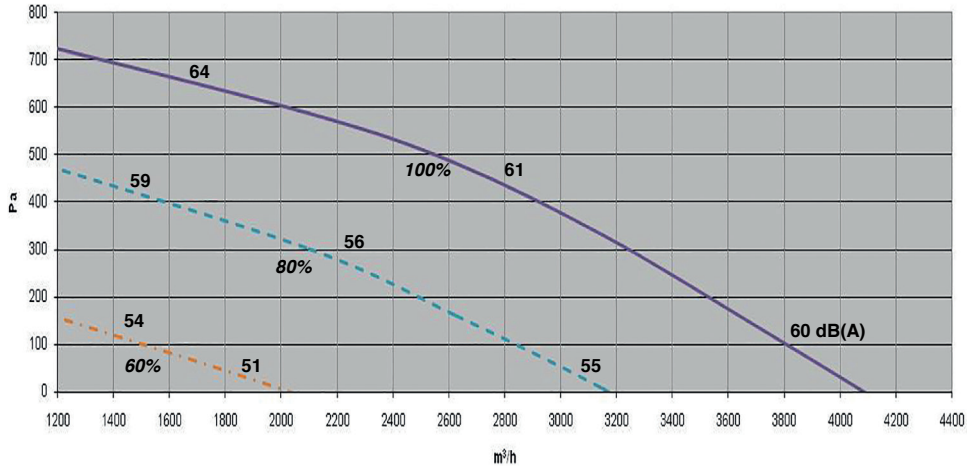

REC PRO 90 - 5400

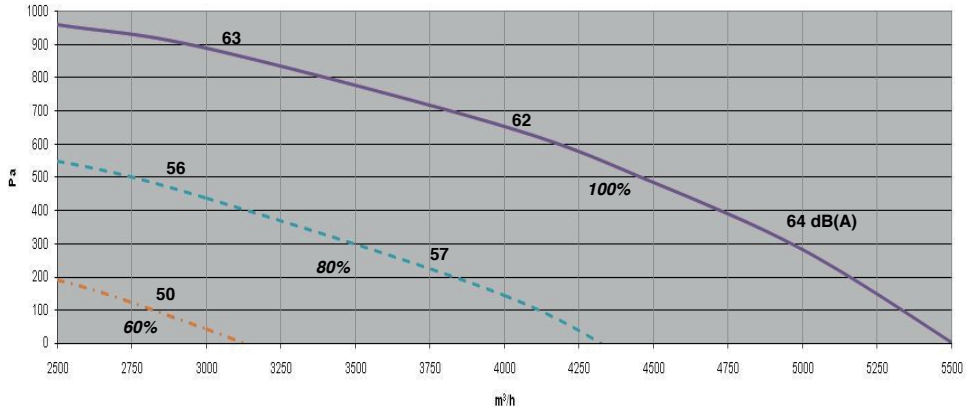

PERFORMANCE AND **ErP** CONFORMITY

EU Regulation 1253/2014

VENTILATION			90-450	90-800	90-1250	90-1900	90-2800	90-3800	90-5400
Airflow rate	Nom	m³/h	450	800	1300	1900	2800	3800	4500
		m³/s	0,125	0,222	0,347	0,528	0,778	1,056	1,25
	Max	m³/h	540	900	1530	2100	3000	4100	5500
External static pressure (1)	Nom	Pa	175	110	250	130	140	105	470
Sound pressure level 1m	Nom	dB(A)	53	53	54	60	61	60	64
Overall power input	Nom	W	330	340	920	930	1820	1920	3050
	Max		340	340	920	930	2000	2000	4850
Overall input current total	Nom	A	2,8	2,9	6,0	6,0	3,2	3,4	4,8
	Max		2,8	2,9	6,0	6,0	3,4	3,5	7,6
Power supply		V-Ph-Hz	230-1-50				400-3+N-50		
Fan speed control		-	0÷10 V						
External leakage			max 3,5% @ -400 Pa (EN 13141-7)						
Internal leakage		%	max 5,5% @ +250 Pa (EN 13141-7)						
Yearly filter energy consumption (5)		kWh	476	719	1281	2065	2482	3259	3180
HEAT RECOVERY (2)			**90-450**	**90-800**	**90-1250**	**90-1900**	**90-2800**	**90-3800**	**90-5400**
Recovery efficiency		%	91,6	91,4	90,7	90,5	90,3	90,4	89,4
Recovery capacity		W	4020	7330	11400	17280	25410	34520	35200
Supply temperature		°C	17,5	17,4	17,2	17,2	17,1	17,1	17,1
CONFORMITY TO EU 1253/2014			**90-450**	**90-800**	**90-1250**	**90-1900**	**90-2800**	**90-3800**	**90-5400**
Recovery efficiency (3)		%	83,2	80	80,5	80	82,5	82,3	89,4
Efficiency bonus		W/m³/s	486	390	405	390	465	459	297
Filter correction factor		-	0	0	0	0	0	0	0
SFP int-lim		W/m³/s	1667	1556	1552	1510	1548	1500	1209
Total internal air pressure drop (3)		Pa	788	826	743	690	855	873	615
Overall fan static efficiency (4)		%	47,3	55,6	48,1	46,0	56,4	58,3	62,0
SFP int		W/m³/s	1666	1485	1545	1500	1516	1498	992
OPERATION LIMITS			**90-450**	**90-800**	**90-1250**	**90-1900**	**90-2800**	**90-3800**	**90-5400**
Air temperature		°C	-20 ÷ 45						
Air Relative Humidity		%	10 ÷ 95						
Working environement		-	Not explosive, not corrosive, not chlorinated, not saline						

(1) Fresh air supply / supply air circuit.
(2) At wet conditions: outside air temperature -7°C 80%R.H., room air temperature 20°C 55% RH.
(3) At dry conditions: outside air temperature 5°C, room air temperatrure 25°C.
(4) Including motor and speed controller efficiency.

SOUND LEVELS

With reference to the nominal operating conditions, the following table reports the sound power values (SWL) in octave band and total; it also reports, for comparative purposes, the sound pressure level (SPL) at 1m, 5m and 10m in output, input and outside the unit, in conditions of ducted units.

MODEL	Hz	63	125	250	500	1000	2000	4000	8000	Tot SWL		Output			Input			Outside		
										dB	dB(A)	1 m dB(A)	5 m dB(A)	10 m dB(A)	1 m dB(A)	5 m dB(A)	10 m dB(A)	1 m dB(A)	5 m dB(A)	10 m dB(A)
90-450	LwdB(A)	62	59	65	65	63	63	62	53	72	69	61	47	41	53	39	33	44	30	24
90-800	LwdB(A)	61	58	64	64	62	62	61	53	71	68	60	47	41	53	39	33	44	30	24
90-1250	LwdB(A)	60	59	65	65	63	63	63	55	72	70	61	48	42	54	40	32	45	31	25
90-1900	LwdB(A)	66	64	74	73	69	68	68	67	79	76	68	54	48	60	46	40	51	37	31
90-2800	LwdB(A)	69	66	74	76	72	71	67	67	80	77	69	55	49	61	47	41	52	38	32
90-3800	LwdB(A)	68	68	72	73	69	70	66	65	79	76	68	54	48	60	46	40	51	37	31
90-5400	LwdB(A)	70	68	80	75	70	70	67	70	83	79	72	58	52	64	50	44	55	41	35

REC PRO 90 **ACCESSORIES**

SKE	Electric heater
CCS-H / CCS-V	External module with water coil
V33	Modulating 3-way valve with actuator
CDX-H / CDX-V	External module of heating / cooling with R410A direct expansion coil
PLM	Plenum with multiple connections
SKR1 / SKR2	**Adjusting damper - SKR 1:** Front / upper - lower (with plenum) air damper - **SKR 2:** side (with plenum) air damper
SSE	On/Off damper actuator (supplied assembled and connected to the SKR if requested)
GAT1 / GAT2	**Flexible connection - GAT 1:** Front / upper - lower (with plenum) flexible connection - **GAT 2:** Side flexible connection (with plenum)
BCC1 / BCC2	**Round adaptor - BCC 1:** Front / upper - lower (with plenum) round adaptor for circular ducts - **BCC 2:** Side round adaptor dor circular ducts (with plenum)
TPR-H / TPR-V	Roof cover

Code	Models	SKE	CCS-H	CCS-V	V33	CDX-H	CDX-V	PLM	SKR1 (1)	SKR2 (1)	SSE (2)	GAT1	GAT2	BCC1	BCC2	TPR-H	TPR-CH	TPR-V	TPR-CV
REC PRO 90 - Horizontal versions																			
1RC9000	REC PRO 90-450	5BT0070	5BT0106	NA	5BT0088	5BT0131	NA	5PL0076	5SE0070	5SE0082	Supplied with SKR1/2	5SU0070	5SU0082	5BO0070	5BO0082	5TE0244	5TE0250	NA	NA
1RC9001	REC PRO 90-800	5BT0071	5BT0107	NA	5BT0089	5BT0132	NA	5PL0077	5SE0071	5SE0083	Supplied with SKR1/2	5SU0071	5SU0083	5BO0071	5BO0083	5TE0245	5TE0251	NA	NA
1RC9002	REC PRO 90-1250	5BT0072	5BT0108	NA	5BT0090	5BT0133	NA	5PL0078	5SE0072	5SE0084	Supplied with SKR1/2	5SU0072	5SU0084	5BO0072	5BO0084	5TE0246	5TE0252	NA	NA
1RC9003	REC PRO 90-1900	5BT0073	5BT0109	NA	5BT0091	5BT0134	NA	5PL0079	5SE0073	5SE0085	Supplied with SKR1/2	5SU0073	5SU0085	5BO0073	5BO0085	5TE0247	5TE0253	NA	NA
1RC9004	REC PRO 90-2800	5BT0074	5BT0110	NA	5BT0092	5BT0135	NA	5PL0080	5SE0074	5SE0086	Supplied with SKR1/2	5SU0074	5SU0086	5BO0074	5BO0086	5TE0248	5TE0254	NA	NA
1RC9005	REC PRO 90-3800	5BT0075	5BT0111	NA	5BT0093	5BT0136	NA	5PL0081	5SE0075	5SE0087	Supplied with SKR1/2	5SU0075	5SU0087	5BO0075	5BO0087	5TE0249	5TE0255	NA	NA
1RC9016	REC PRO 90-5400	5BT0068	5BT0124	NA	5BT0144	5BT0127	NA	5PL0083	5SE0091	5SE0092	Supplied with SKR1/2	5SU0090	5SU0091	5BO0067	5BO0066	5TE0215	5TE0214	NA	NA
REC PRO 90 - Vertical versions																			
1RC9006	REC/V PRO 90-450	5BT0070	NA	5BT0112	5BT0088	NA	5BT0137	5PL0076	5SE0070	5SE0082	Supplied with SKR1/2	5SU0070	5SU0082	5BO0070	5BO0082	NA	NA	5TE0256	5TE0262
1RC9007	REC/V PRO 90-800	5BT0071	NA	5BT0113	5BT0089	NA	5BT0138	5PL0077	5SE0071	5SE0083	Supplied with SKR1/2	5SU0071	5SU0083	5BO0071	5BO0083	NA	NA	5TE0257	5TE0263
1RC9008	REC/V PRO 90-1250	5BT0072	NA	5BT0114	5BT0090	NA	5BT0139	5PL0078	5SE0072	5SE0084	Supplied with SKR1/2	5SU0072	5SU0084	5BO0072	5BO0084	NA	NA	5TE0258	5TE0264
1RC9009	REC/V PRO 90-1900	5BT0073	NA	5BT0115	5BT0091	NA	5BT0140	5PL0079	5SE0073	5SE0085	Supplied with SKR1/2	5SU0073	5SU0085	5BO0073	5BO0085	NA	NA	5TE0259	5TE0265
1RC9010	REC/V PRO 90-2800	5BT0074	NA	5BT0116	5BT0092	NA	5BT0141	5PL0080	5SE0074	5SE0086	Supplied with SKR1/2	5SU0074	5SU0086	5BO0074	5BO0086	NA	NA	5TE0260	5TE0266
1RC9011	REC/V PRO 90-3800	5BT0075	NA	5BT0117	5BT0093	NA	5BT0142	5PL0081	5SE0075	5SE0087	Supplied with SKR1/2	5SU0075	5SU0087	5BO0075	5BO0087	NA	NA	5TE0261	5TE0267
1RC9017	REC/V PRO 90-5400	5BT0068	NA	5BT0119	5BT0144	NA	5BT0128	5PL0083	5SE0091	5SE0092	Supplied with SKR1/2	5SU0090	5SU0091	5BO0067	5BO0066	NA	NA	5TE0213	5TE0212

NA = Not Applicable
(1) The dampers are supplied without actuator. SSE actuator can be assembled if requested in phase of order.
(2) The actuator is not supplied separately but assembled on the dampers SKR1 and SKR2, if requested.

SKE - Electric heater

The type of heater is with filament elements, made in galvanized steel frame inserted in the unit with function of pre and / or post-heating and equipped with a safety thermostat with automatic and manual reset

CODE		SKE -450	SKE -800	SKE -1250	SKE -1900	SKE -2800	SKE -3800	SKE-5400
SKE MODEL		5BT0070	5BT0071	5BT0072	5BT0073	5BT0074	5BT0075	5BT0068
Power	kW	1,5	2,5	4,0	5,0	7,5	10,5	12,5
ΔT (1)	°C	9,8	9,2	9,0	7,7	7,9	8,1	8,1
Pressure loss air intake side (1)	Pa	5	6	10	10	11	12	12
Power supply	V-ph-Hz	230-1-50				400-3-50		

(1) at nominal airflow

CCS-H / CCS-V

External module with water coil

External module with water coil (CCS-H: for horizontal version units, CCS-V: for vertical version units) that interfaces directly to the inlet/extract side.
The 3 rows water coil includes a condensate collection tray in aluminum and is suitable for the treatment of both heating and cooling.

MODEL			90-450	90-800	90-1250	90-1900	90-2800	90-3800	90-5400
Code CCS-H			5BT0106	5BT0107	5BT0108	5BT0109	5BT0110	5BT0111	5BT0124
Code CCS-V			5BT0112	5BT0113	5BT0114	5BT0115	5BT0116	5BT0117	5BT0119
Cooling capacity (1)	total	kW	2,46	4,47	6,65	10,62	16,14	20,68	26,29
	sensible		1,35	2,41	3,66	5,84	8,72	11,37	14,20
Thermal capacity (2)		kW	3,30	5,86	9,08	14,03	20,83	27,50	33,36
Water flow (1)		l/h	432	756	1152	1836	2772	3564	4500
Pressure loss air intake side (1)		kPa	12	18	9	13	19	15	33
Pressure loss air intake side (1)		Pa	51	53	51	50	50	55	54
Weight		kg	28	31	35	42	52	58	77

(1) air intake 28,0°C 60% RH; water in/out 7°/12°C
(2) air intake 13°C; water in/out 45°/40°

REC PRO 90 **ACCESSORIES**

V33 - Modulating 3-way valve with actuator

The kit includes a 3-way valve to regulate the water flow, combinable with the external module CCS, and a modulating electric actuator.
the connection fittings are not supplied (to be supplied by the installer).

MODEL		V33 -450	V33 -800	V33 -1250	V33 -1900	V33 -2800	V33 -3800	V33-5400
CODE		5BT0088	5BT0089	5BT0090	5BT0091	5BT0092	5BT0093	5BT0144
Nominal pressure	-	PN16 (ISO7286/EN1333)						
Stroke	mm	2,5				5,5		
Hydraulic connection	GAS	3/4"F		3/4"F		1"F		
Kvs	m^3/h	2,5		4,0		10,0		
Fluid temperature	°C	+2 ÷ +95 (glic. max 40%)						
Power supply	V - Hz	24cc - 50/60						
Regulation signal	V	0 ÷ 10						

CDX-H / CDX-V - External module of heating / cooling with R410A direct expansion coil

External module (CDX-H: fo horizontal version units, CDX-V: for vertical version units) that interfaces directly to the to the inlet/extract side. It includes a 3 row DX coil provided with a condensate collection tray in aluminum (suitable for R410A) , suitable to the treatment of both heating and cooling, and tub of aluminum condensate collection.

REC MODEL			90-450	90-800	90-1250	90-1900	90-2800	90-3800	90-5400
CODE CDX-H			5BT0131	5BT0132	5BT0133	5BT0134	5BT0135	5BT0136	5BT0127
CODE CDX-V			5BT0137	5BT0138	5BT0139	5BT0140	5BT0141	5BT0142	5BT0128
Cooling power (1)	total	kW	2,51	4,36	6,96	10,94	16,11	21,22	25,31
	sensible		1,41	2,44	3,90	6,13	9,02	11,88	14,17
Heating power (2)		kW	3,33	5,71	9,01	13,90	20,36	26,50	31,72
Pressure load from the air side (1)		Pa	51	53	51	50	50	55	43
Connections to be welded		mm	8/8	12/16	12/16	12/16	16/22	22/28	22/28
Weight		kg	28	31	35	42	52	58	76

(1) air intake 28,0°C 60% RH; evaporation temperature 8°C
(2) air intake 13°C; condensation temperature 45°C

REC PRO 90 **ACCESSORIES**

PLM - Plenum with multiple connections

External module which can interface on both sides of the unit (either in a horizontal or vertical configuration), allowing the air inlet or outlet on all sides. It can be completed with the SKR1 type dampers and / or SKR2 and their electrical actuators SSE.

CODE	TYPE	KG	NOMINAL PRESSURE LOSS (CURVE AT 90°) PA
5PL0076	90-450	21	6
5PL0077	90-800	23	9
5PL0078	90-1250	26	19
5PL0079	90-1900	30	14
5PL0080	90-2800	39	8
5PL0081	90-3800	44	14
5PL0083	90-5400	59	12

The plenum is provided with 10 possible aeraulic connections
(6 of which are closed by insulated plates A)
blocked with self-drilling screws as indicated in the following figure:

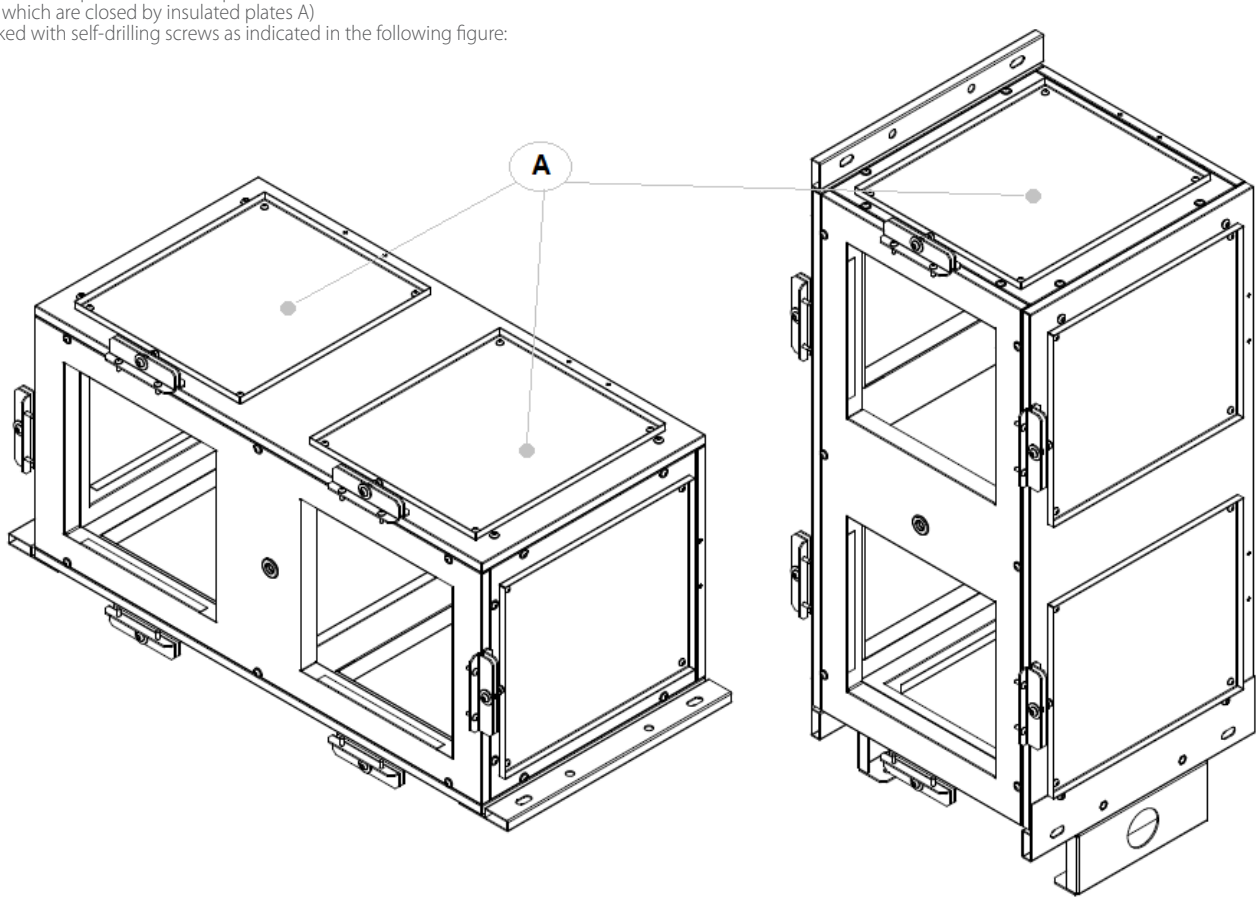

REC PRO 90 **ACCESSORIES**

Example of installation:

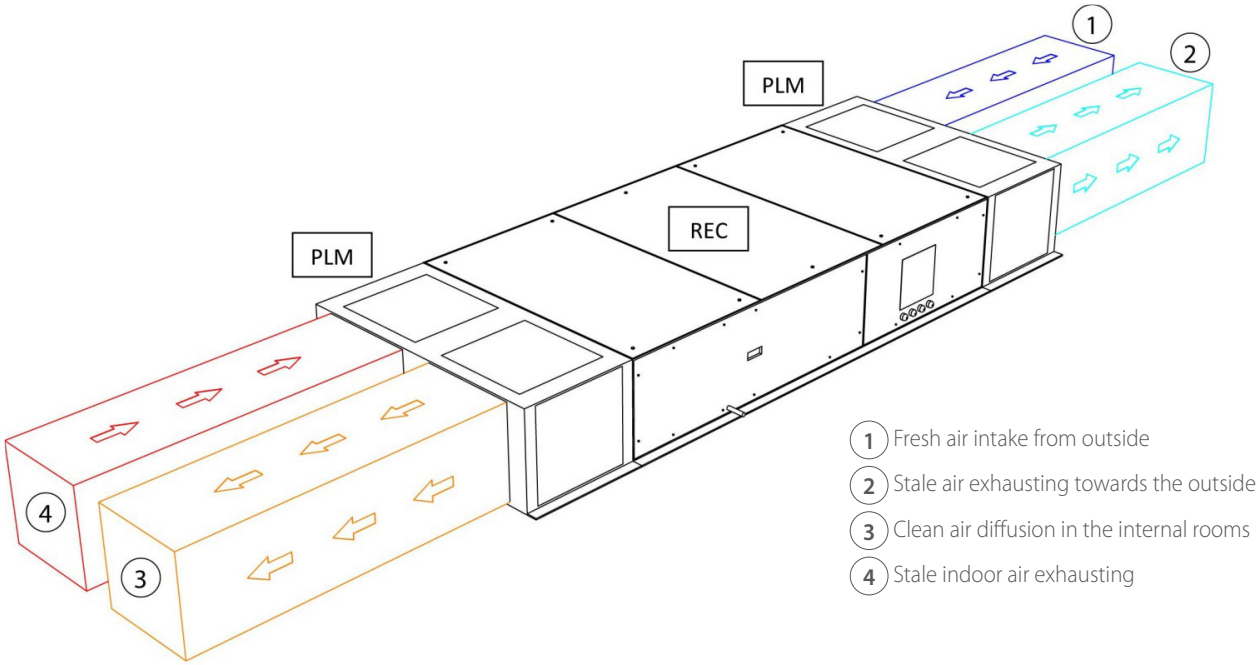

Remove and block again the plates on the unused connections in order to create the desired layout. This operation has to be made before positioning the plenum.

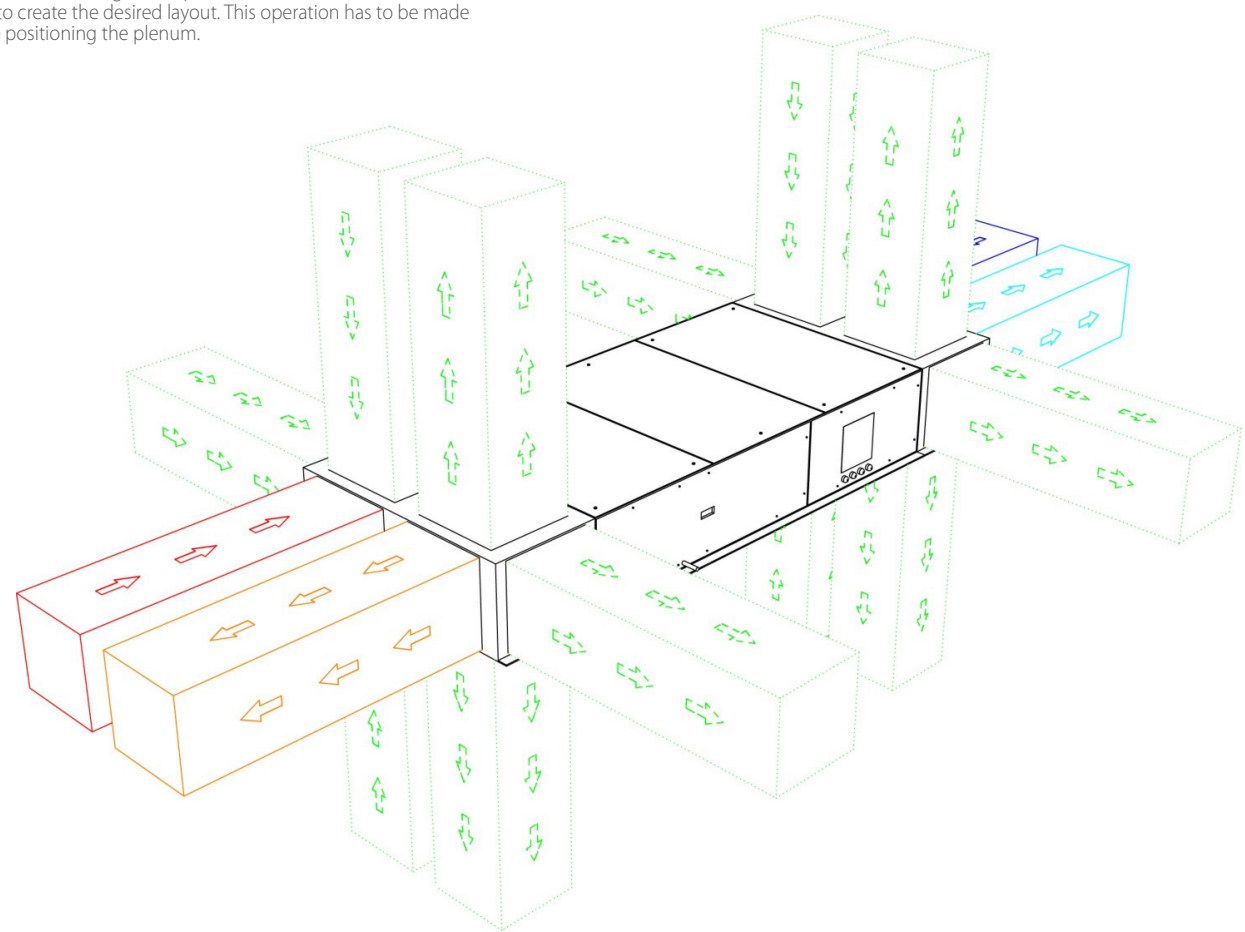

REC PRO 90 **ACCESSORIES**

SKR1 (Front) / **SKR2** (Lateral) - Ad justing Dampers

Made of the frame and opposing aluminum fins, with pin for coupling to the electrical actuator.
It can be installed directly on each unit air inlets, in those of the plenum (PLM) or CCS / CDX modules.
SKR 1: Front / upper - lower (with plenum) air damper. **SKR 2:** side air damper (with plenum).
The dampers are supplied without actuator. If requested SSE actuator can be supplied assembled on the dampers.

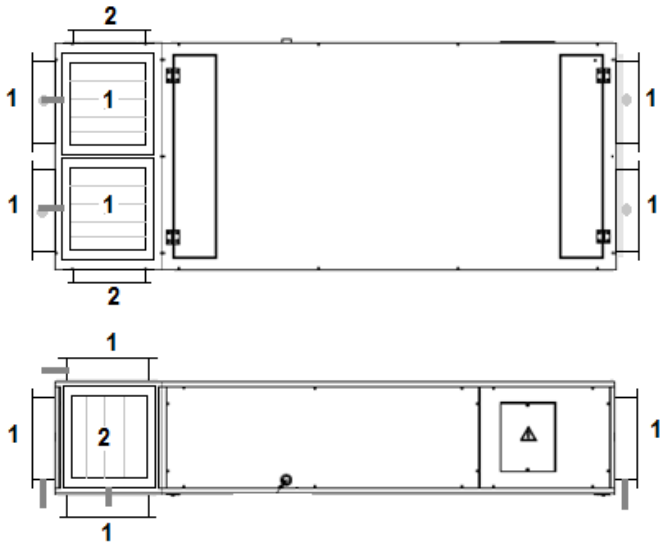

1=SKR1
2=SKR2

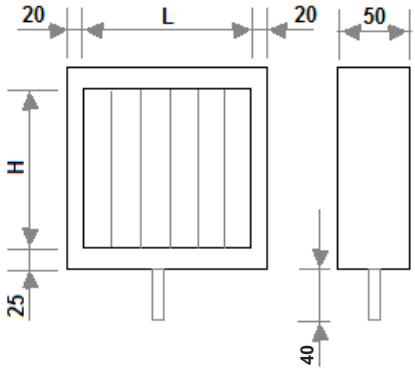

CODE	TYPE 1	AIR PASSAGE L X H	KG
5SE0070	SKR1 90-450	250x230	1.6
5SE0071	SKR1 90-800	290x270	2.1
5SE0072	SKR1 90-1250	370x355	2.6
5SE0073	SKR1 90-1900	610x355	3.7
5SE0074	SKR1 90-2800	610x490	4.3
5SE0075	SKR1 90-3800	770x490	6.2
5SE0091	SKR1 90-5400	810x720	8.1

CODE	TYPE 2	AIR PASSAGE L X H	KG
5SE0082	SKR2 90-450	250x230	1.6
5SE0083	SKR2 90-800	290x270	2.0
5SE0084	SKR2 90-1250	370x355	2.6
5SE0085	SKR2 90-1900	370x355	2.9
5SE0086	SKR2 90-2800	490x490	4.0
5SE0087	SKR2 90-3800	490x490	4.0
5SE0092	SKR2 90-5400	810x720	8.1

SSE - Damper actuator

On/off type - 230V-50Hz, 1,5 W.
The actuator is not available separately if requested,
it is supplied assembled on the damper SKR1 / SKR2.

GAT1 (Front) **GAT2** (Lateral)

Flexible connection

It allows a flexible connection between the base unit or its external modules and the air ducts, in order to prevent the transmission of vibrations to the latter.
The dimensions coincide with the corresponding dampers SKR1 / SKR2.
GAT 1: Front / upper - lower (with plenum) flexible connection
GAT 2: Side flexible connection (with plenum)

GAT1	
5SU0070	Front connection 450
5SU0071	Front connection 800
5SU0072	Front connection 1300
5SU0073	Front connection 1900
5SU0074	Front connection 2800
5SU0075	Front connection 3800
5SU0090	Front connection 5400

GAT2	
5SU0082	Front connection 450
5SU0083	Front connection 800
5SU0084	Front connection 1300
5SU0085	Front connection 1900
5SU0086	Front connection 2800
5SU0087	Front connection 3800
5SU0091	Front connection 5400

REC PRO 90 **ACCESSORIES**

BCC1 (Front) / **BCC2** (Lateral) - Round adaptor for circular ducts

It allows the connection between the base unit or between its external modules and circular ducts.
Made of galvanized steel and provided with coupling plate (suitable for SKR1 / SKR2 and GAT1 / GAT2).
BCC 1: Front / upper - lower (with plenum) round adaptor for circular ducts - **BCC 2:** Side round adaptor dor circular ducts (with plenum)

REC MODEL		90-450	90-800	90-1250	90-1900	90-2800	90-3800	90-5400
Code BCC1		5BO0070	5BO0071	5BO0072	5BO0073	5BO0074	5BO0075	5BO0067
Code BCC2		5BO0082	5BO0083	5BO0084	5BO0085	5BO0086	5BO0087	5BO0066
Nominal Ø of the connection	mm	250	315	315	400	500	500	596
Connection thickness	mm	100	100	100	100	100	100	100
Nominal pressure loss	Pa	7	7	16	10	9	16	12

TPR-H / TPR-V / TPR-CH / TPR-CV - Roof cover

TPR-H: Horizontal unit - **TPR-V:** Vertical unit - **TPR-CH:** Horizontal unit with external module - **TPR-CV:** Vertical unit with external module
The roof cover ,in pre-painted steel, is necessary whenever the units are outdoor installed and could be exposed to bad weather.

TPR-H

CODE	MODEL
5TE0244	TPR-H 450
5TE0245	TPR-H 800
5TE0246	TPR-H 1300
5TE0247	TPR-H 1900
5TE0248	TPR-H 2800
5TE0249	TPR-H 3800
5TE0215	TPR-H 5400

TPR-CH

CODE	MODEL
5TE0250	TPR-CH 450
5TE0251	TPR-CH 800
5TE0252	TPR-CH 1300
5TE0253	TPR-CH 1900
5TE0254	TPR-CH 2800
5TE0255	TPR-CH 3800
5TE0214	TPR-CH 5400

TPR-V

CODE	MODEL
5TE0256	TPR-V 450
5TE0257	TPR-V 800
5TE0258	TPR-V 1300
5TE0259	TPR-V 1900
5TE0260	TPR-V 2800
5TE0261	TPR-V 3800
5TE0213	TPR-V 5400

TPR-CV

CODE	MODEL
5TE0262	TPR-CV 450
5TE0263	TPR-CV 800
5TE0264	TPR-CV 1300
5TE0265	TPR-CV 1900
5TE0266	TPR-CV 2800
5TE0267	TPR-CV 3800
5TE0212	TPR-CV 5400